DATA SHEET

METALLIC MANUAL FILTER

FY CYCLONIC EFFECT

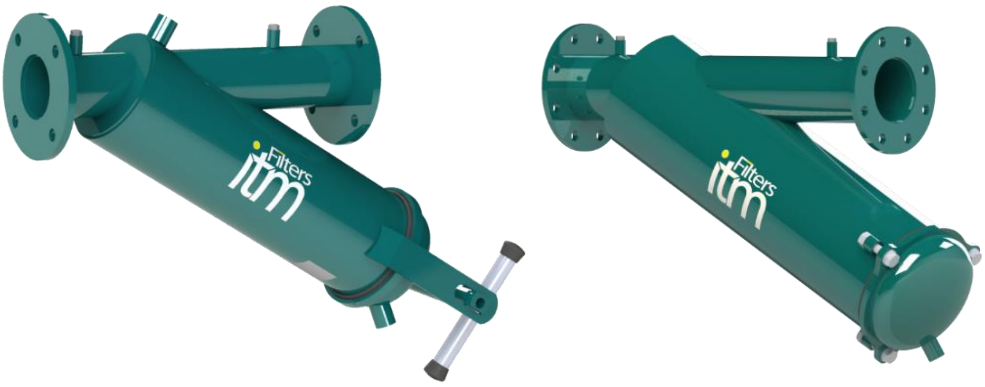

www.itmfilters.com

1. Y FILTER – METALLIC CYCLONIC EFFECT (FY-EC)

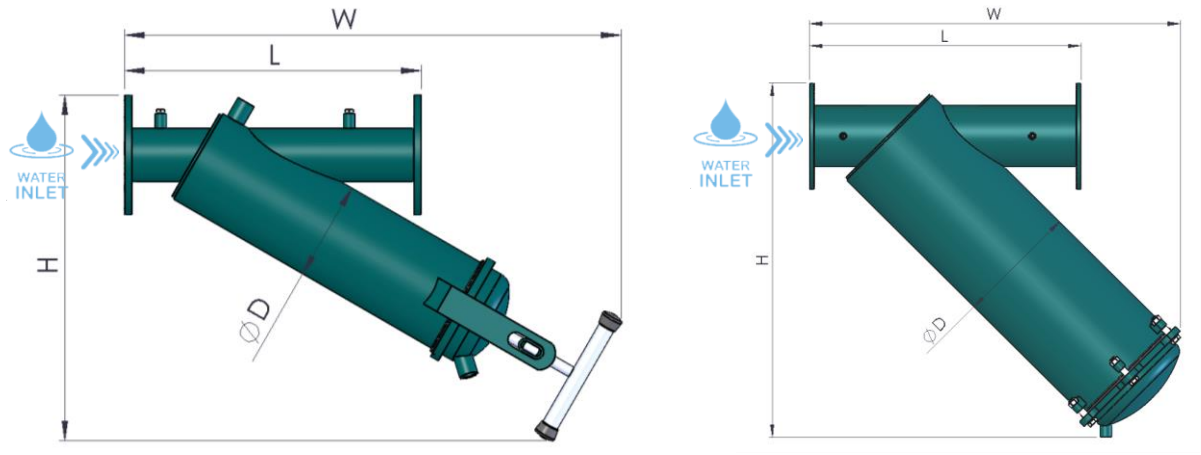

IMAGE 1

Working pressure máx. 10 kg/cm²

MODEL	ØI/ØO	Flow (m³/h)	Filtration Surface (cm²)	Net Weight (kg)	Filter opening	Dimensions (mm)			
		Mesh Cartridge (Drip)				ØD	L	H	W
FY-EC-2"-M	Male Thread 2"	39	1500	12	Wing Nut	165	450	503	672
FY-EC-3"-M	Flange 3"	57	2006	21	Wing Nut	165	495	577	830
FY-EC-4"-M	Flange 4"	66	3160	38	Screws	220	695	710	1139
FY-EC-5"-M	Flange 5"	66	3160	39	Screws	220	695	685	1005
FY-EC-6"-M	Flange 6"	120	5579	66	Screws	323	725	924	990

TABLE 1

*Ask about other pressures

Y Filter - Cyclonic Effect – Flow rates as a function of plugged orifices

- **Flows FY-2'' – CIC Differential pressure 0,5 kg/cm²**

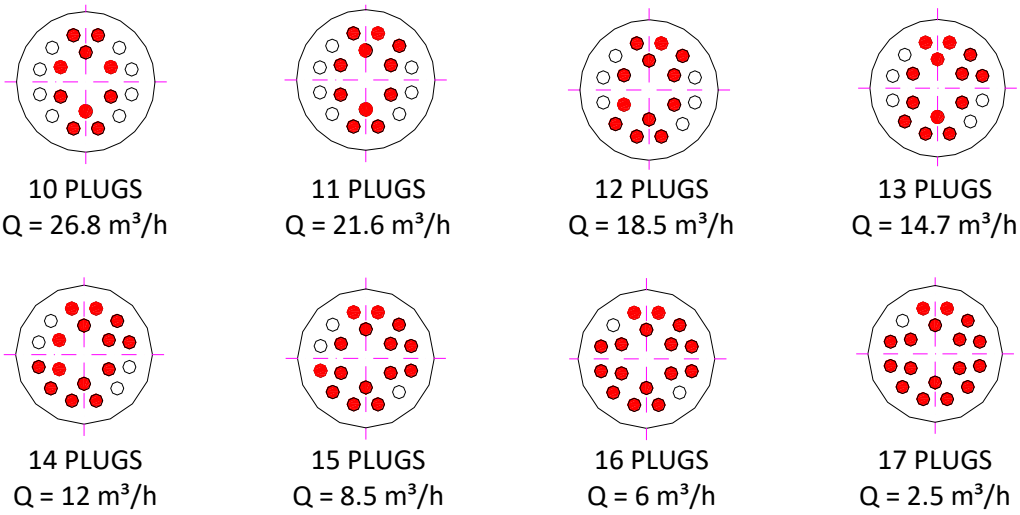

TABLE 2

- **Flows FY-3'' – CIC Differential pressure 0,5 kg/cm²**

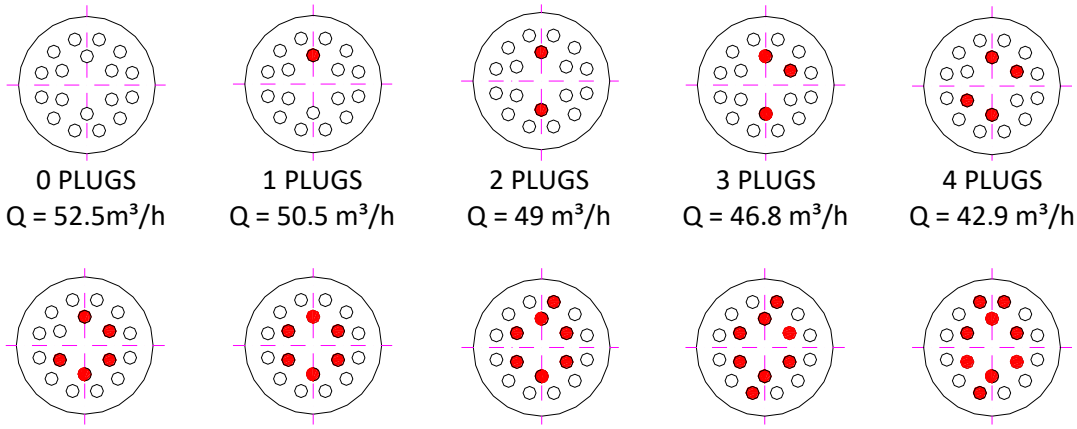

TABLE 3

- **Flows FY-4'' and FY-5''– CIC Differential pressure 0,5 kg/cm²**

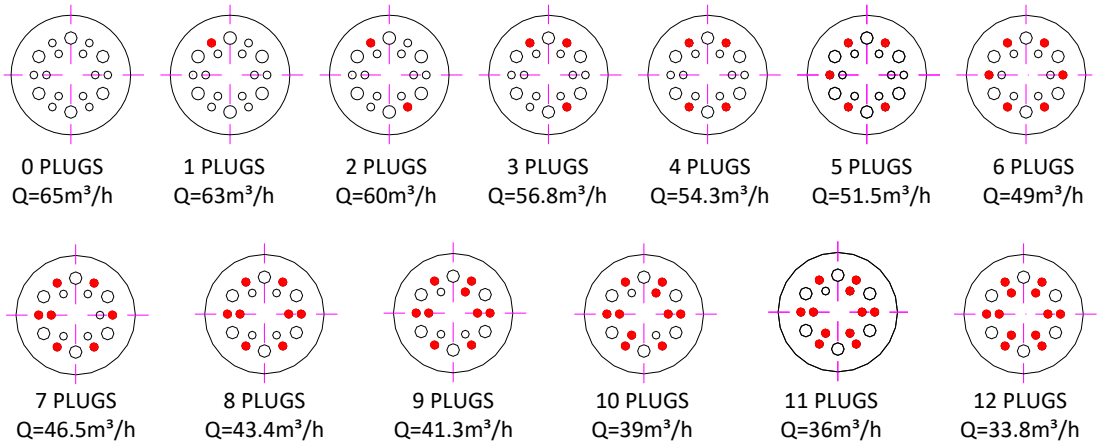

TABLE 4

- **Flows FY-6'' – CIC Differential pressure 0,5 kg/cm²**

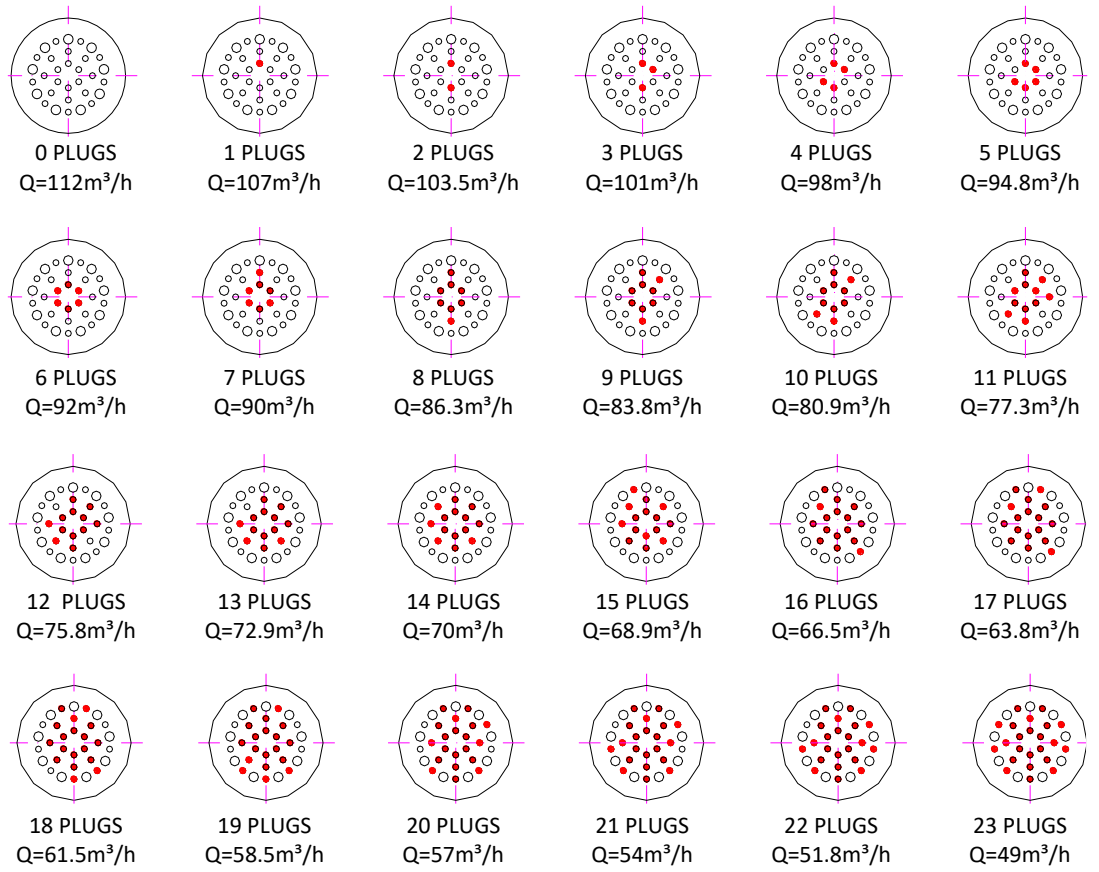

TABLE 5

2. MANUFACTURING TECHNICAL CHARACTERISTICS

- Materials:
  - Carbon steel metal components.
  - Zinc plated screws 6.8.
  - Mesh cartridge : PVC structure with AISI-316 Stainless Steel. Filtration degree: 125 microns.
  - EPDM gaskets: 60 SHORE.

- Superficial treatment:
  - Surface shot blasting up to SA ½ grade.
  - Two-layer EPOXY-POLYESTER powder paint finish, oven-polymerized RAL 6004.

- Working characteristics:
  - Maximum operating temperature 50ºC.

INTRAMESA MZ S.A.

Polígono Armentera P-99

22400 Monzón (Huesca)

www.itmfilters.com

info@itmfilters.com

Tel. 974 10 50 05